ONLINE Bedrooms

BRIDGING UNIT ASSEMBLY INSTRUCTIONS

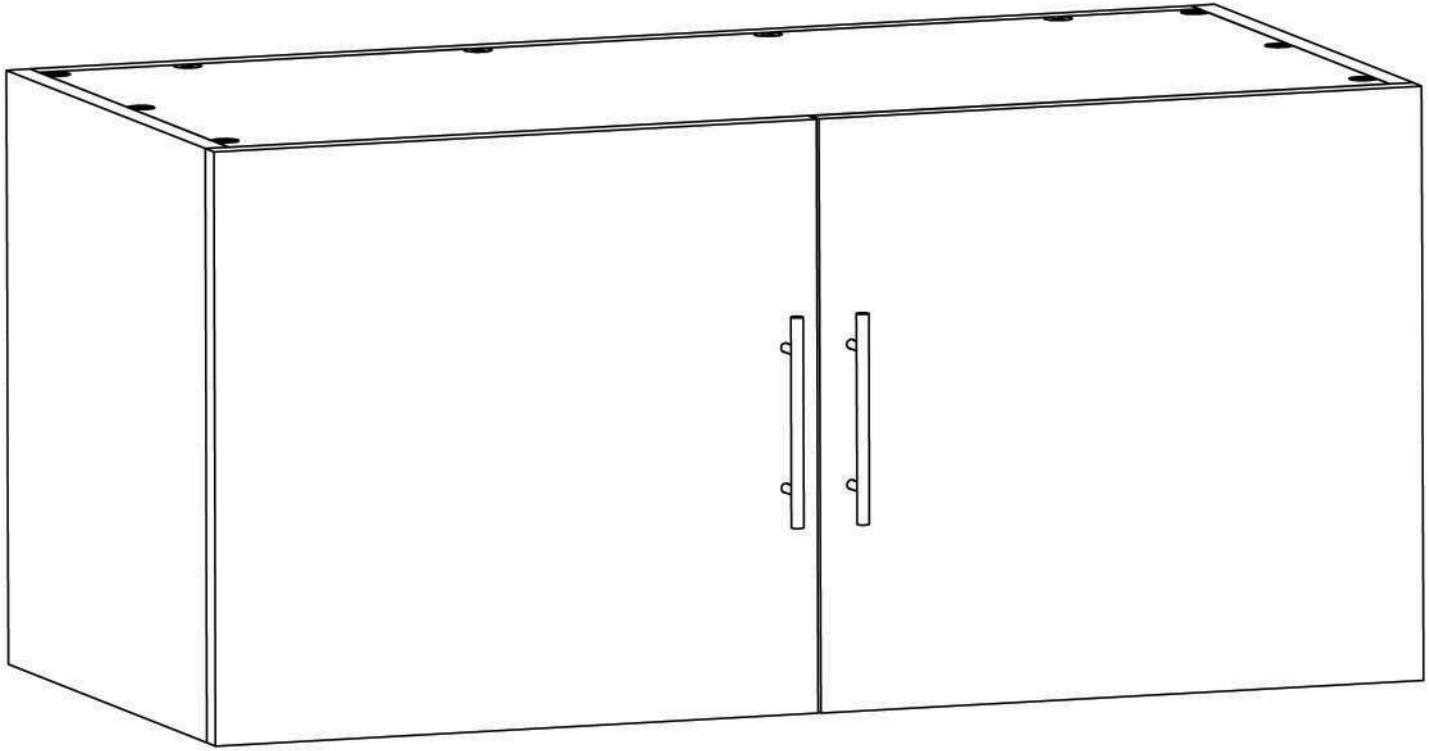

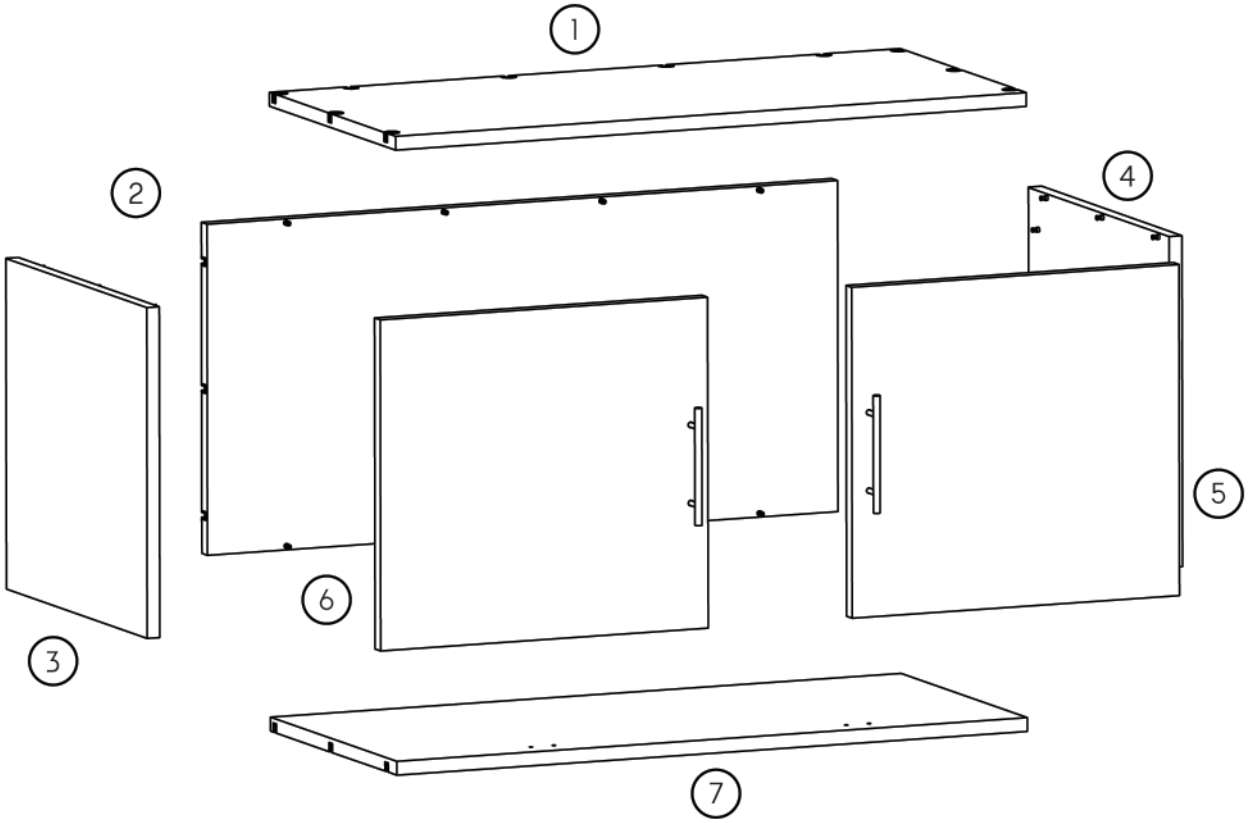

Parts

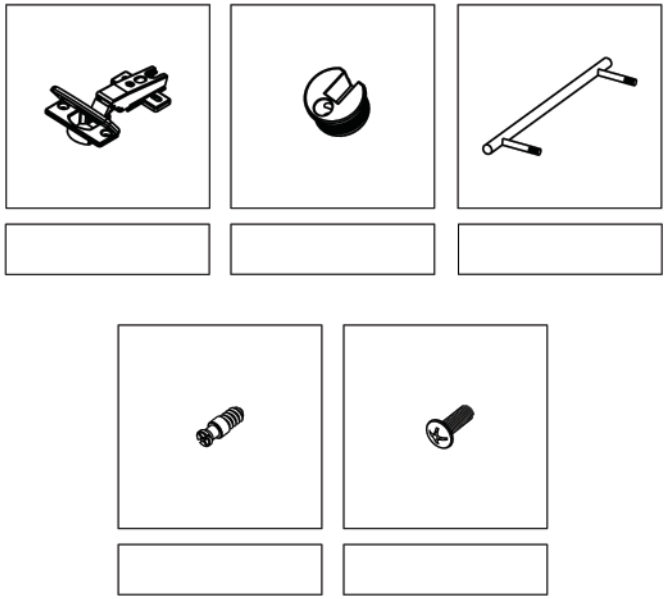

Tools

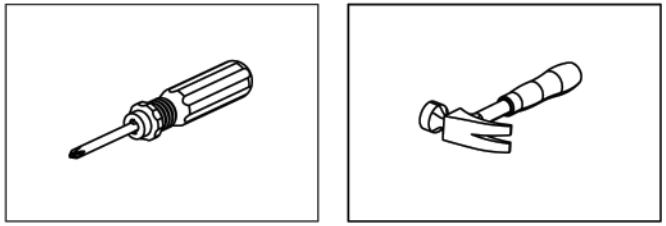

Step 01

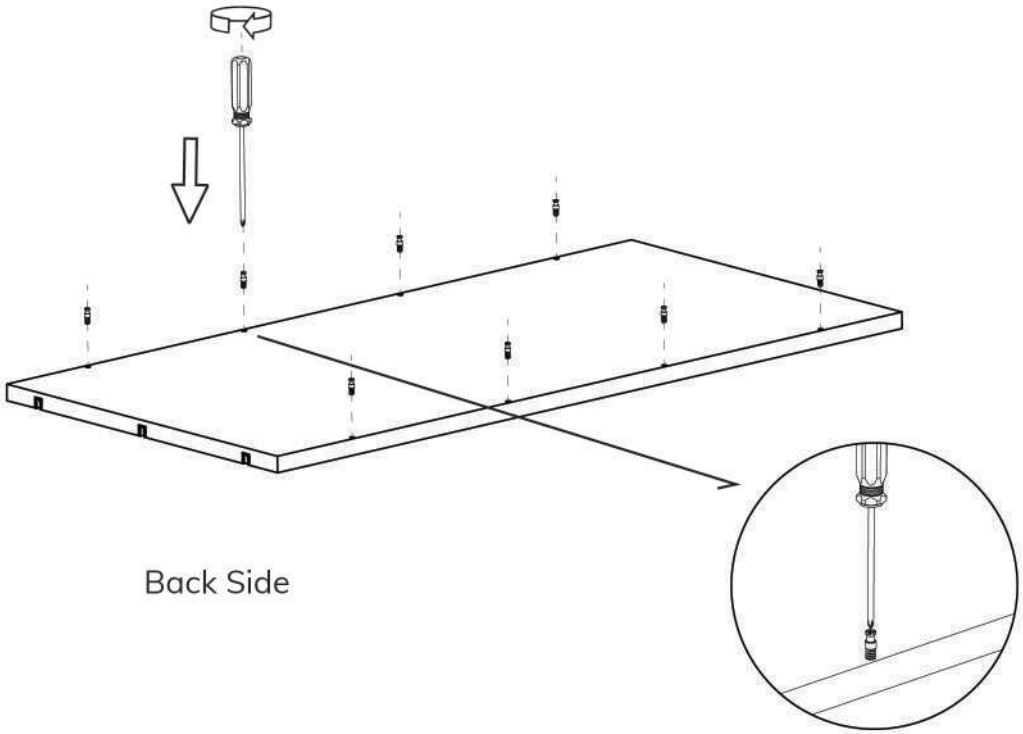

Step 02

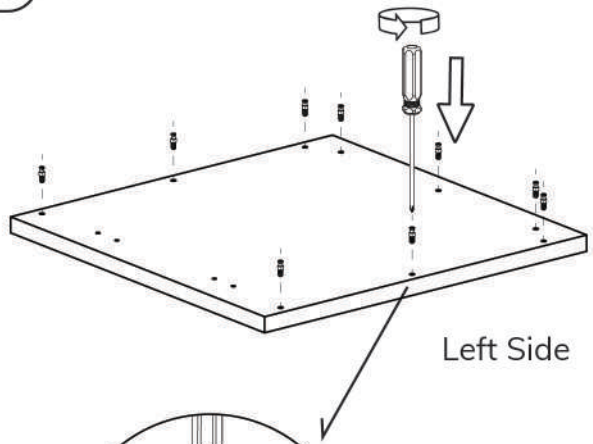

Step 03

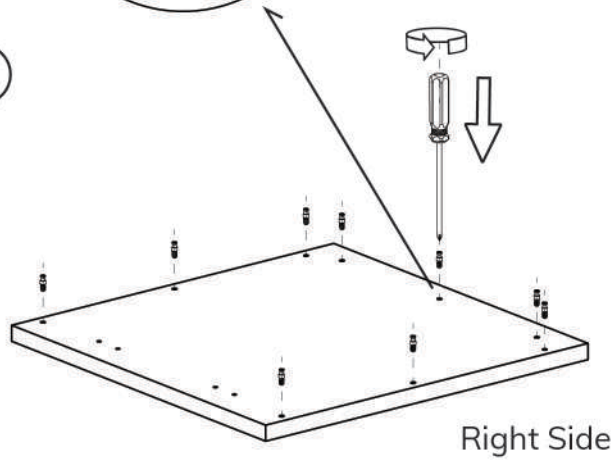

Step 04

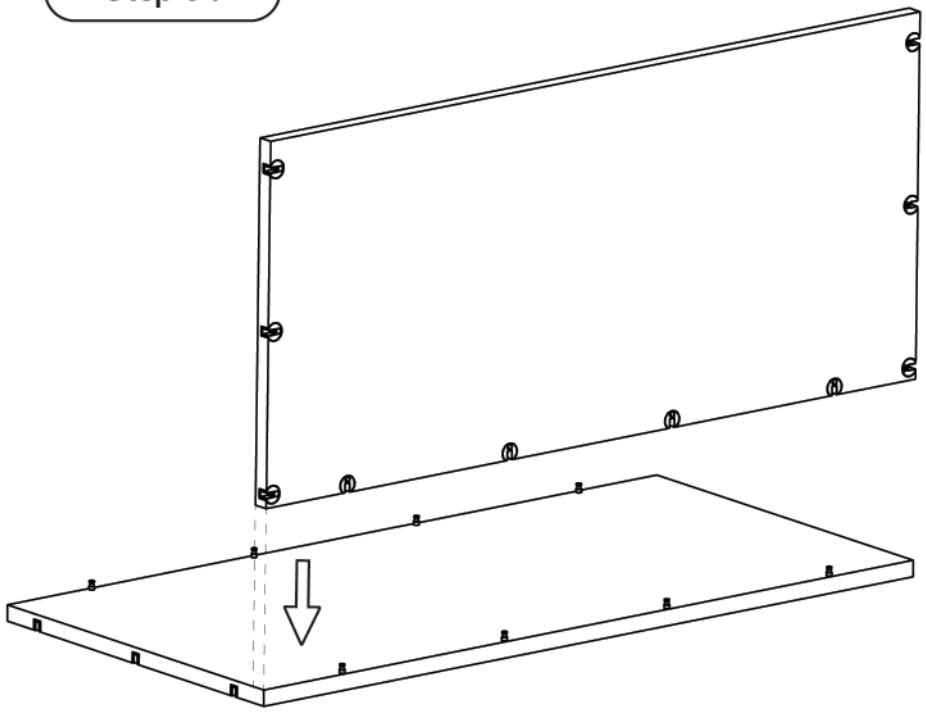

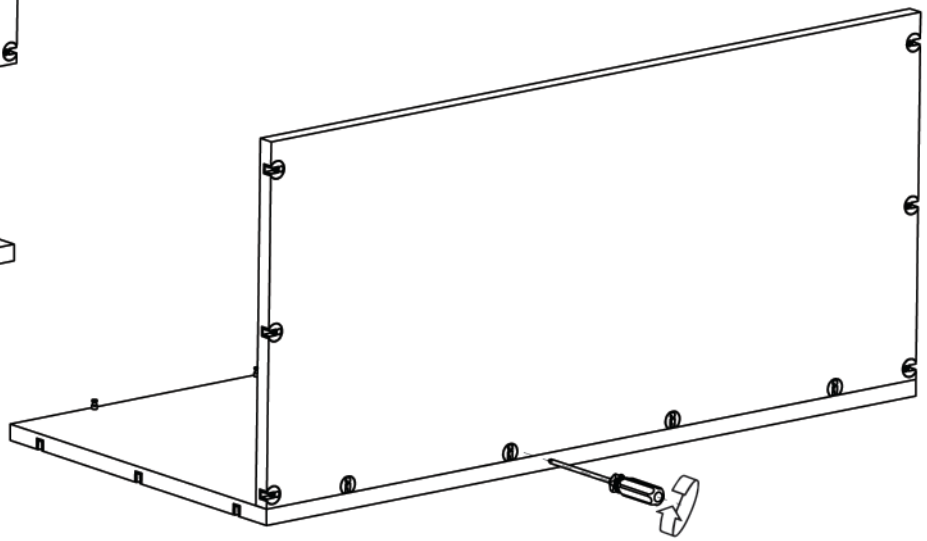

Step 05

Step 06

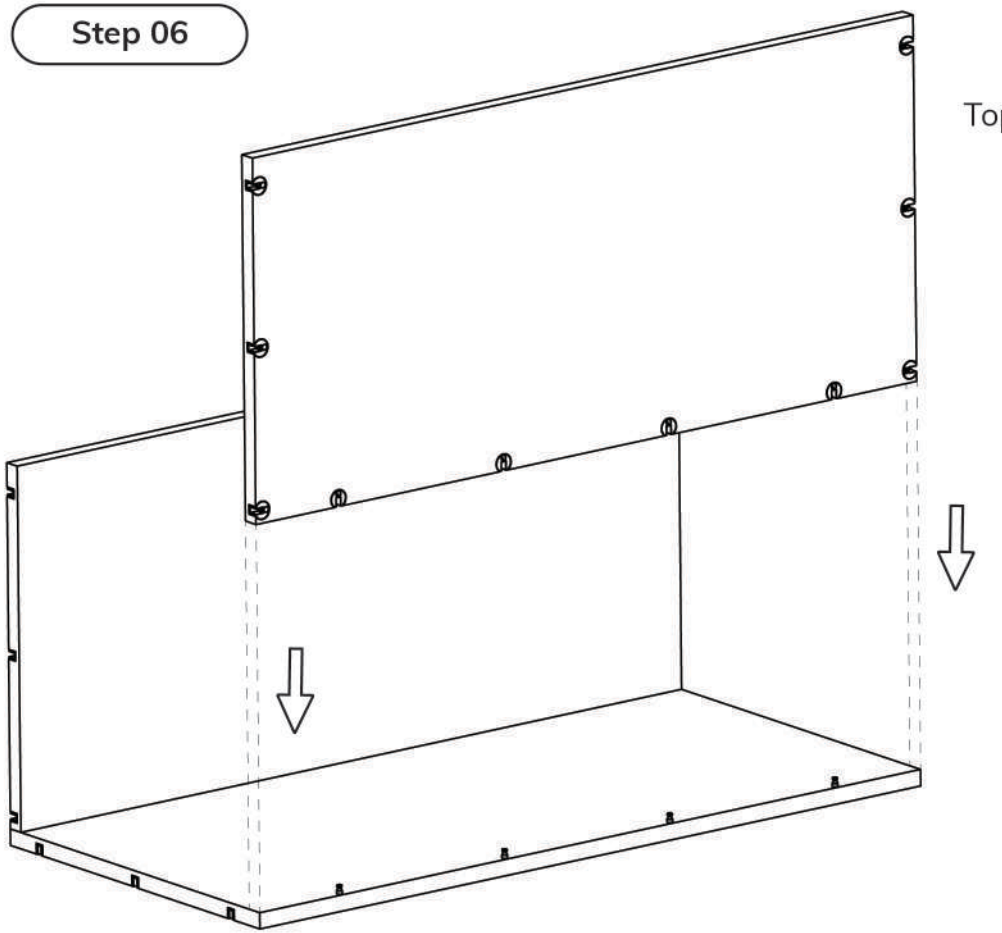

Step 07

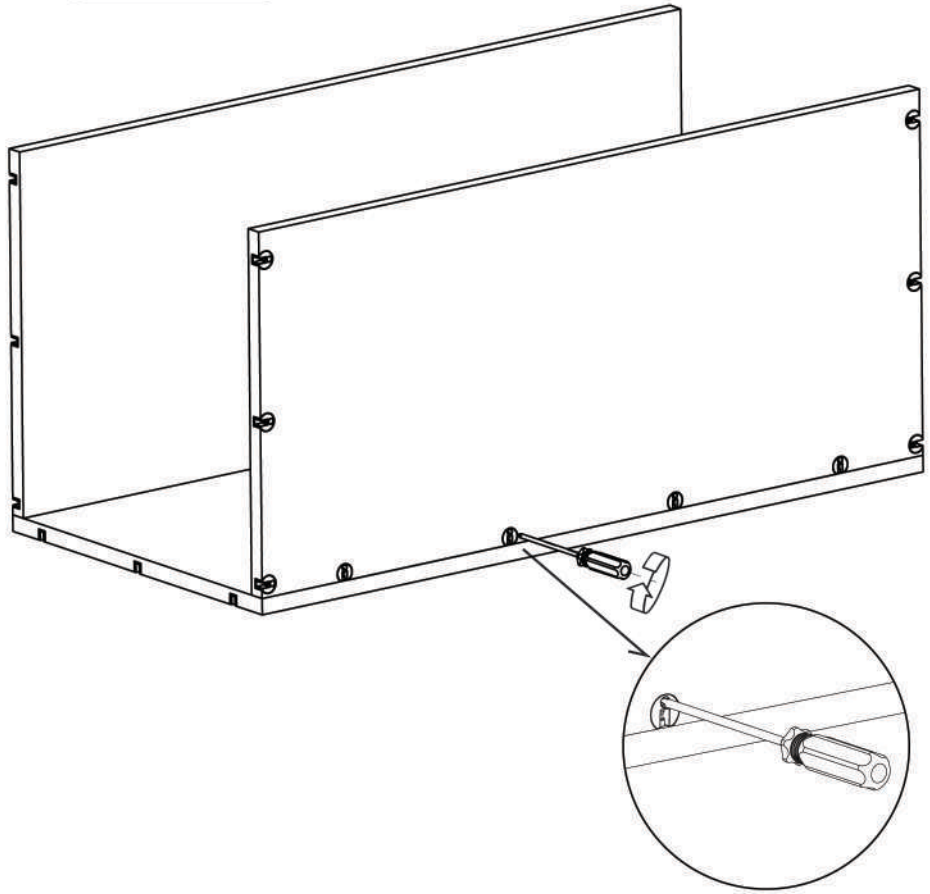

Step 08

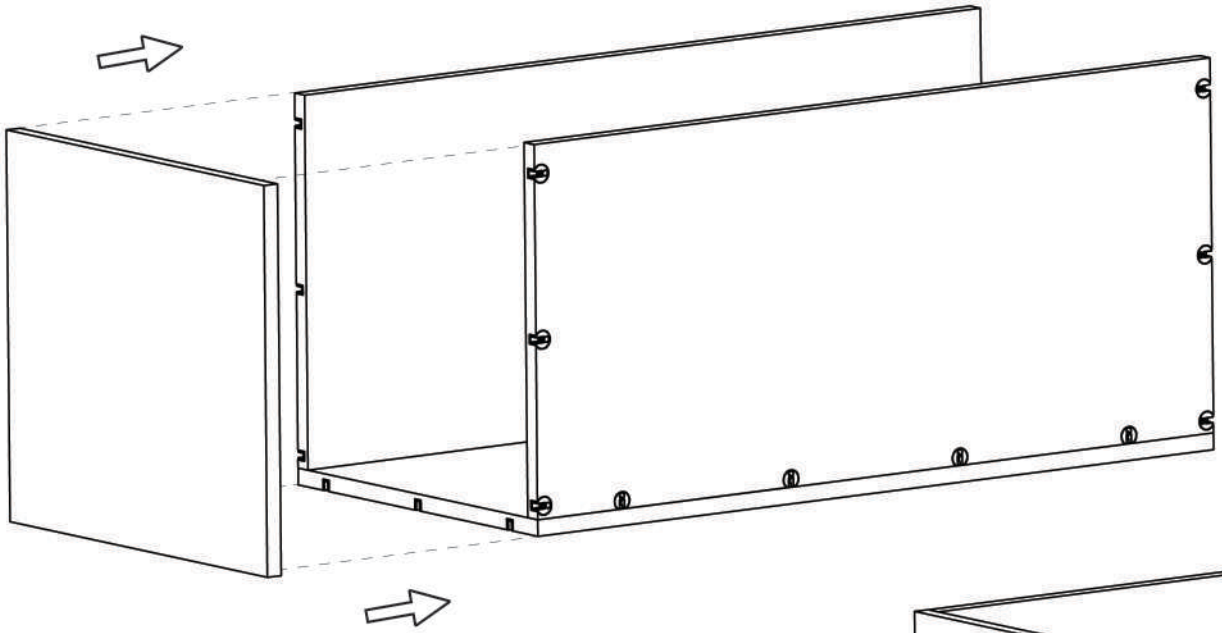

Step 9

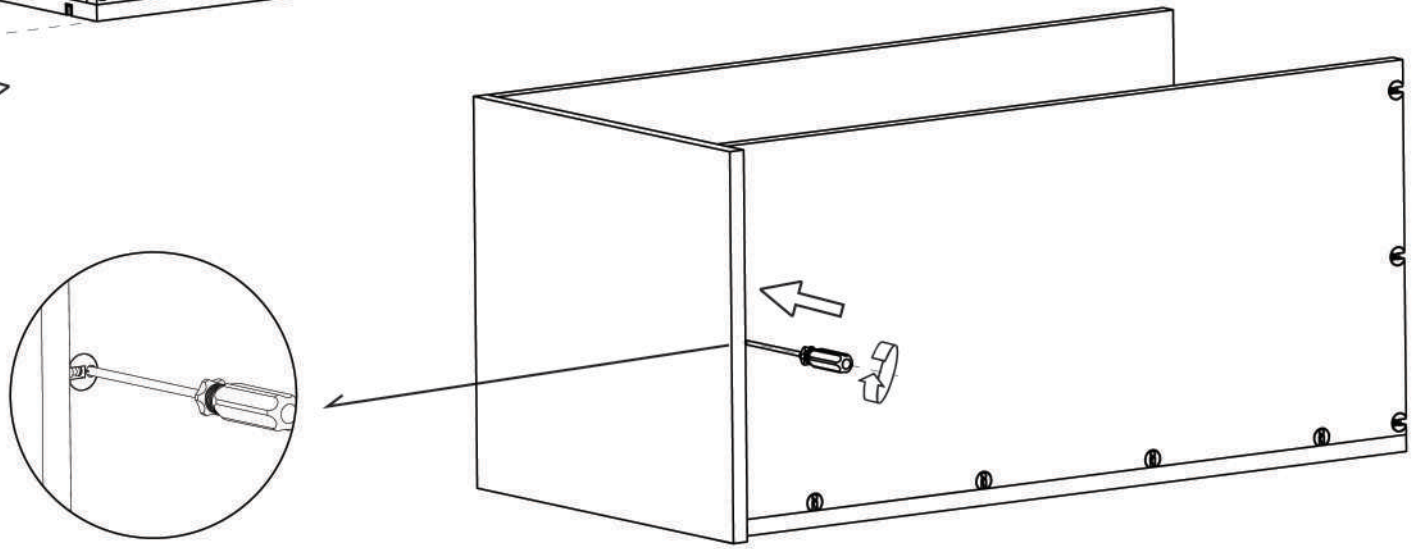

Step 10

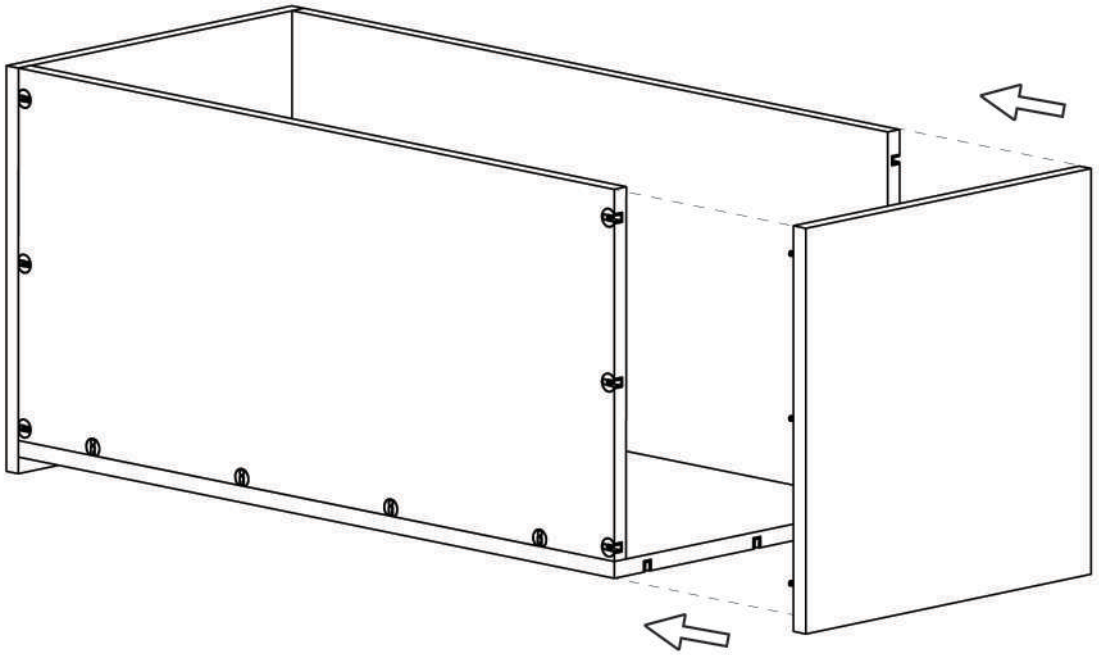

Step 11

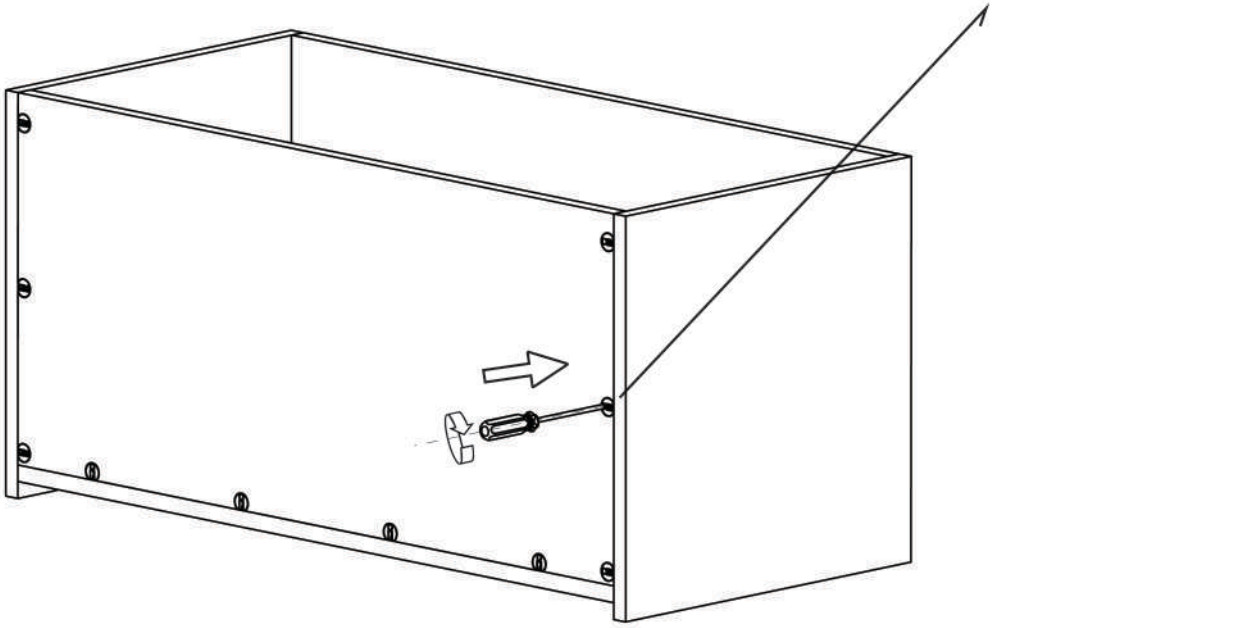

Step 12

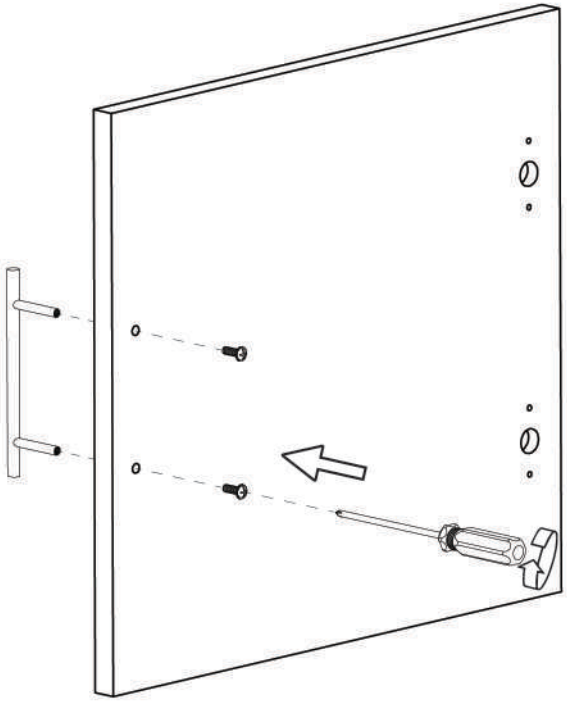

Step 13

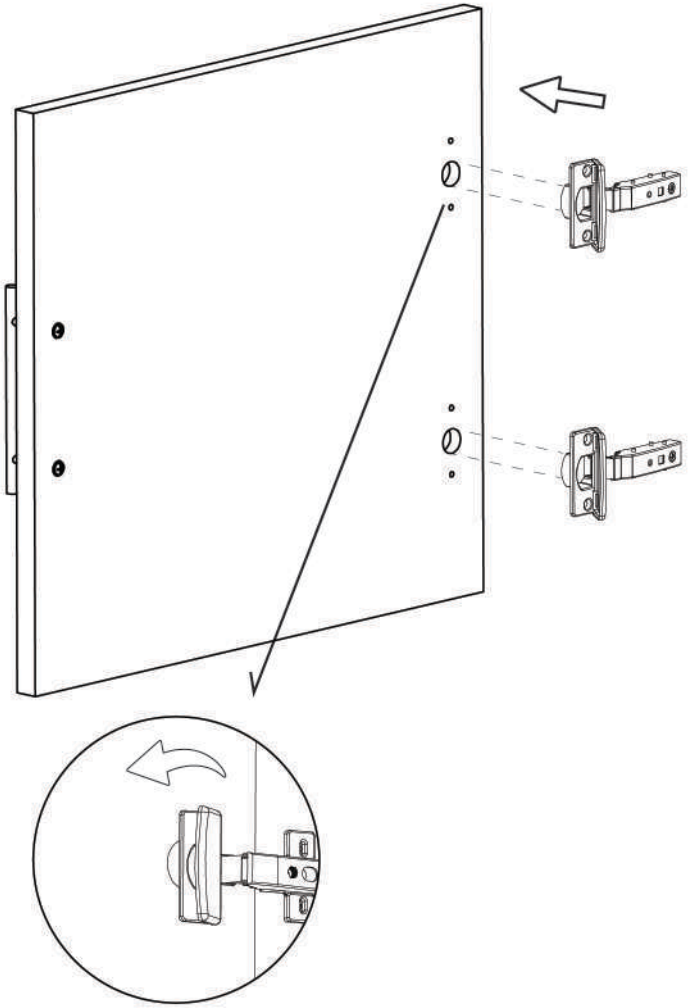

Step 14

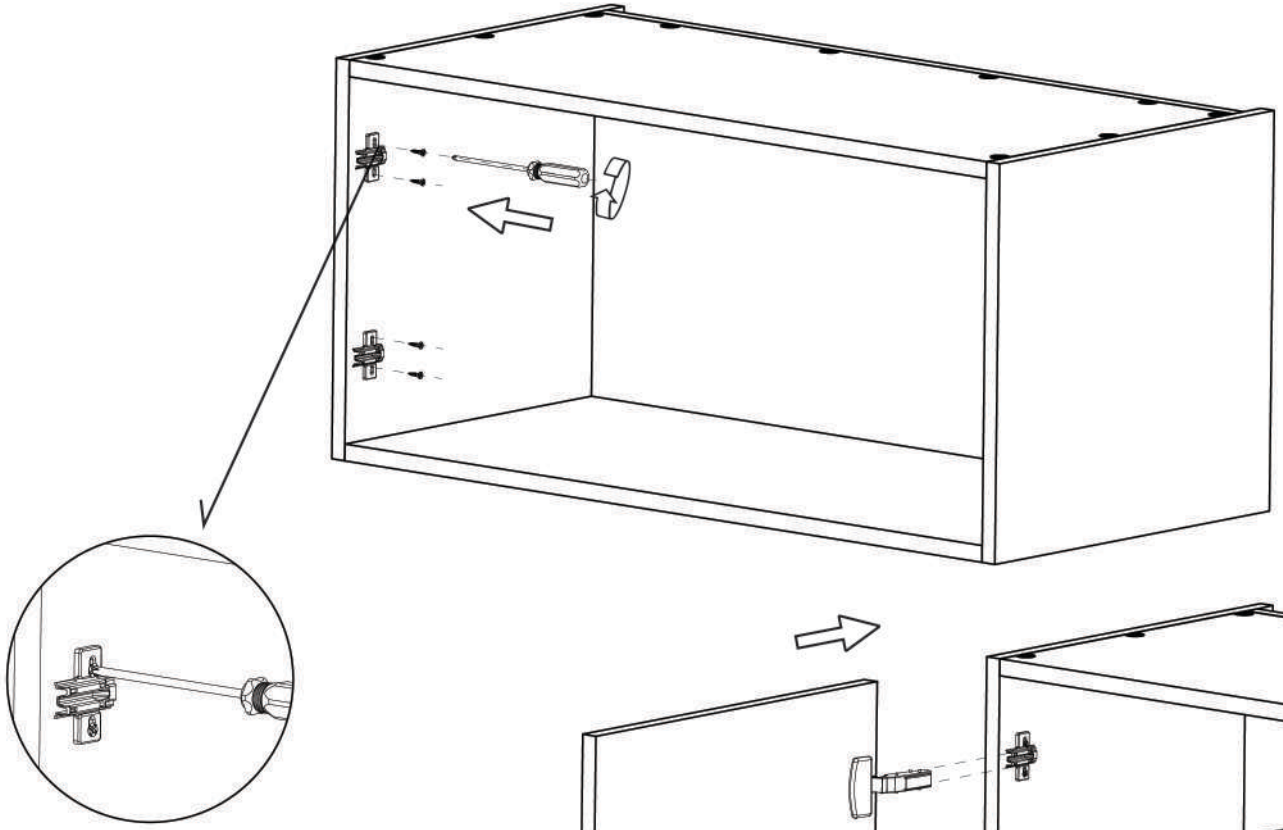

Step 15

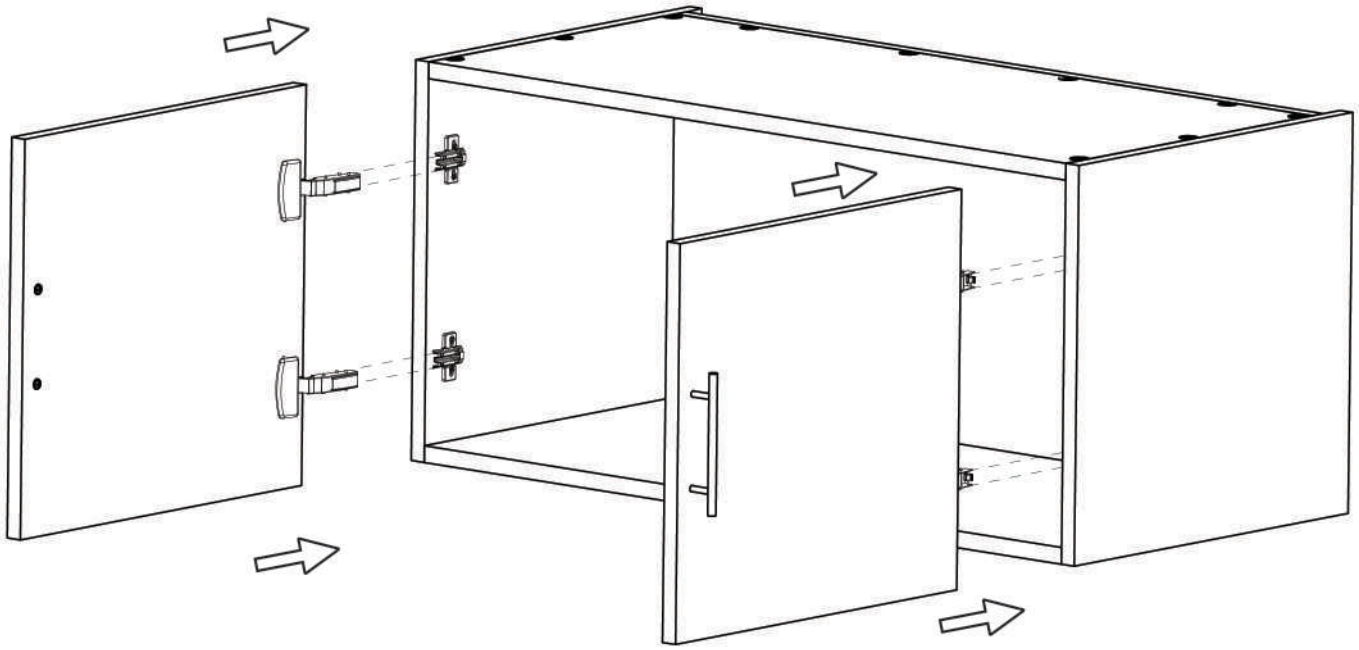

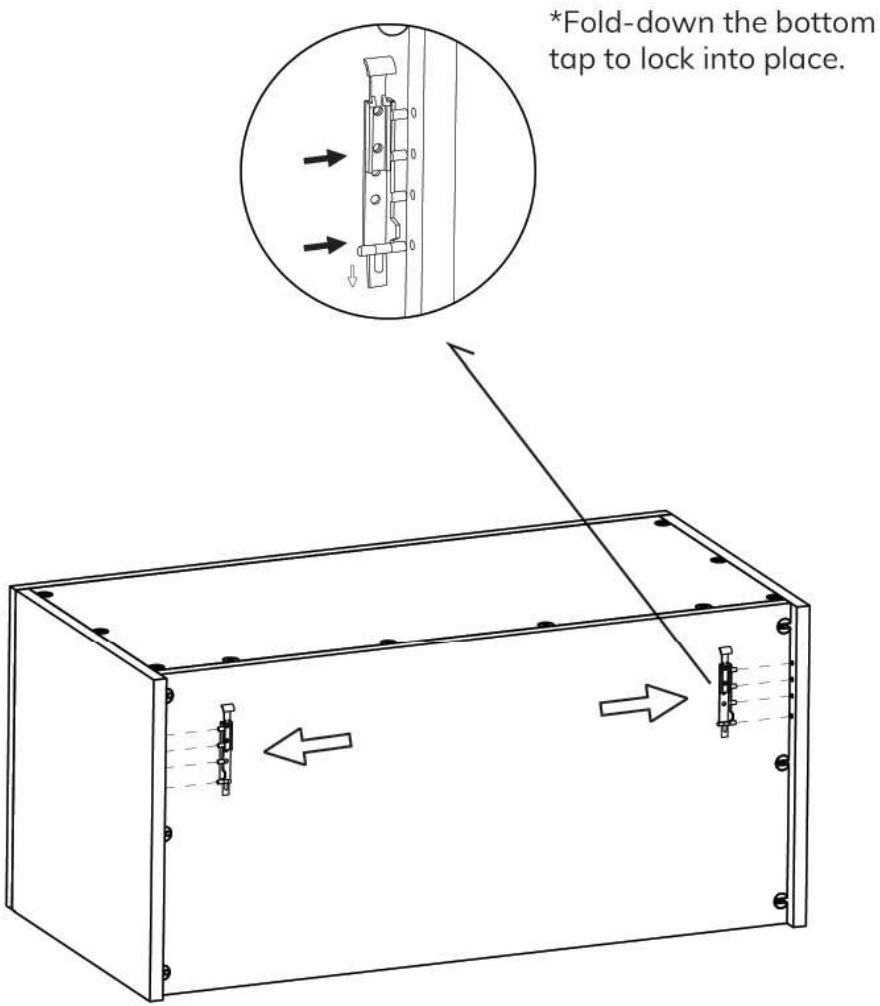

Step 16

Step 17

NOTE: Make sure you use suitable fixings for your type of wall

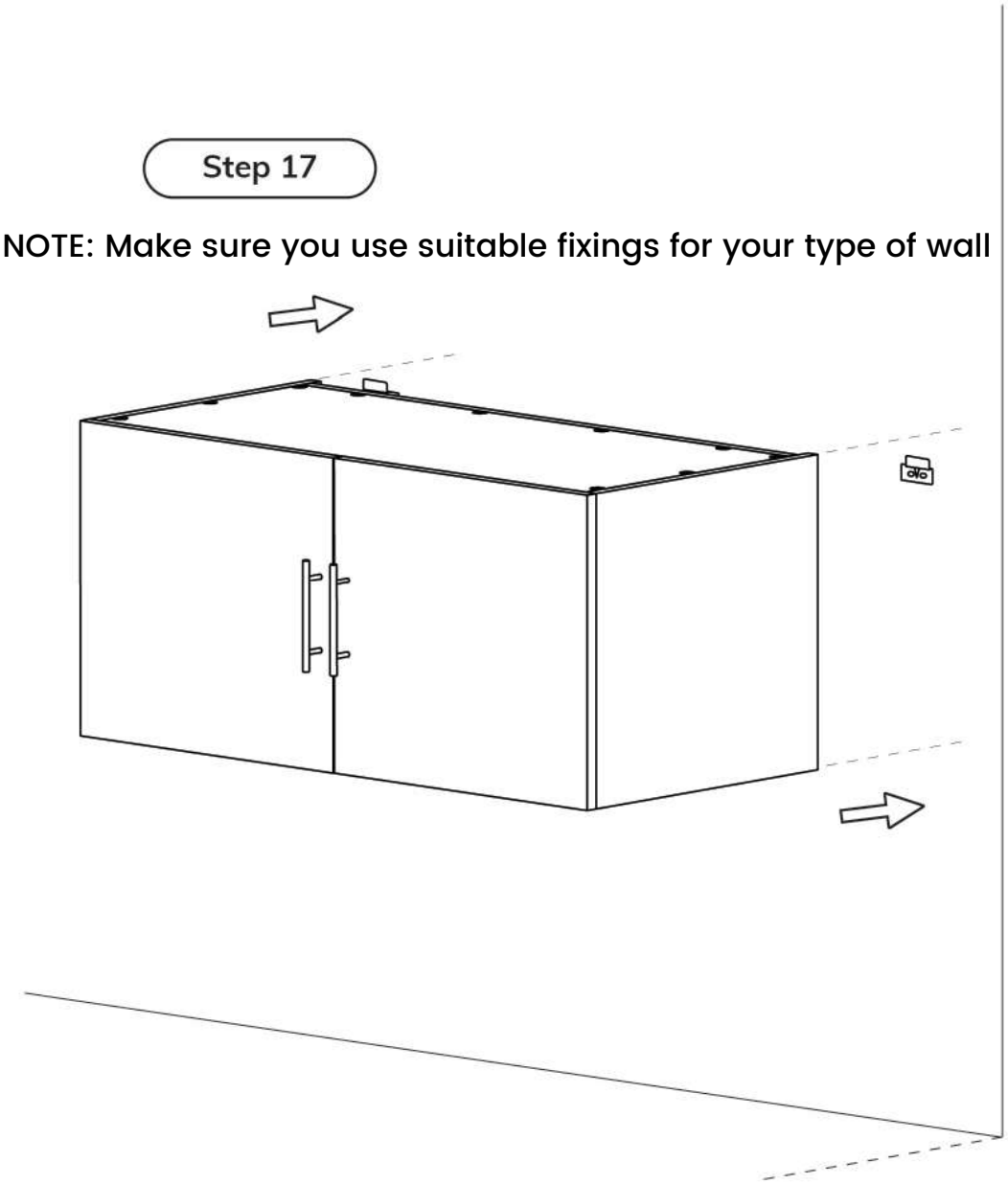

After fixing to the wall, you **must** screw the bridging unit to the wardrobe units beside it for extra stability and safety.

Step : Attaching the Door

Step 1

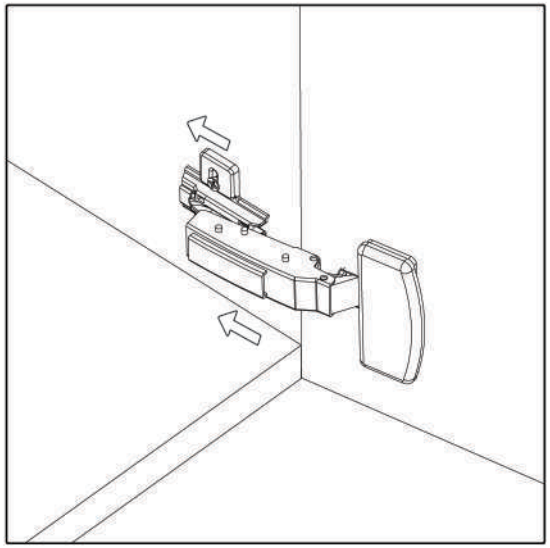

Step 2

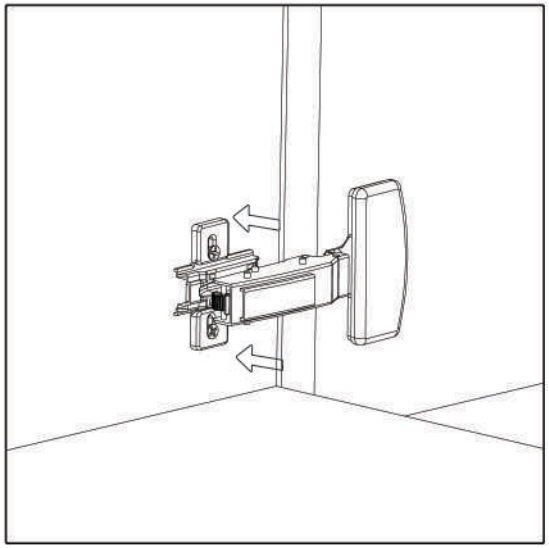

To remove the Door

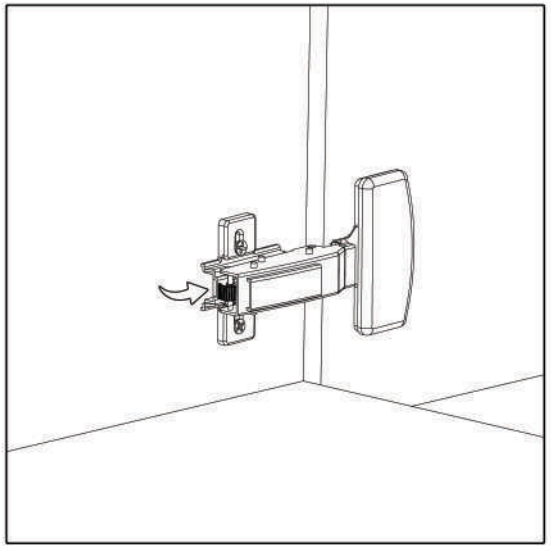

Step : Door Adjustment

Step 1

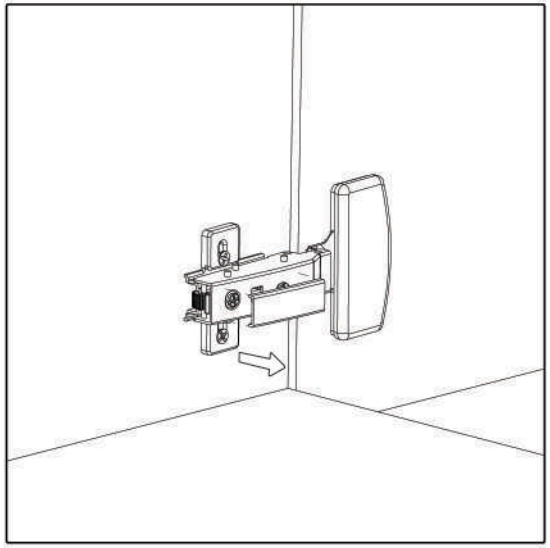

Step 2

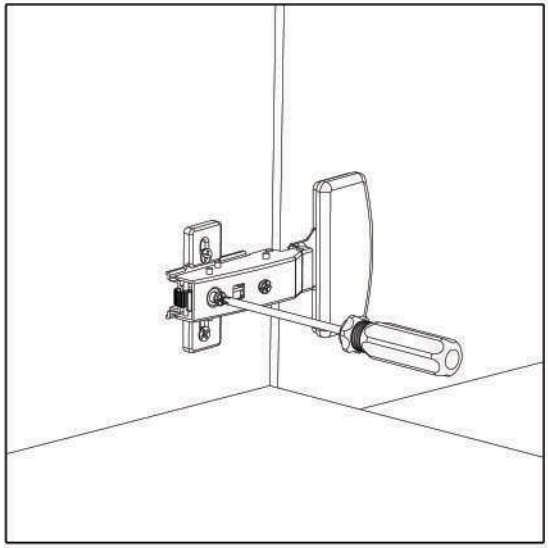

Step 3

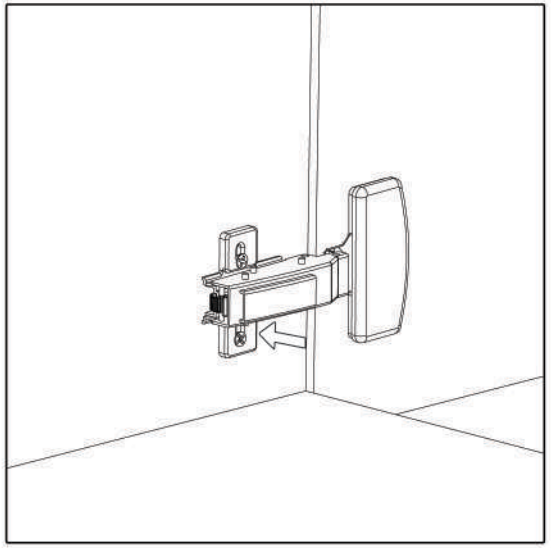

Step : Attaching the Upper Door

Step 01

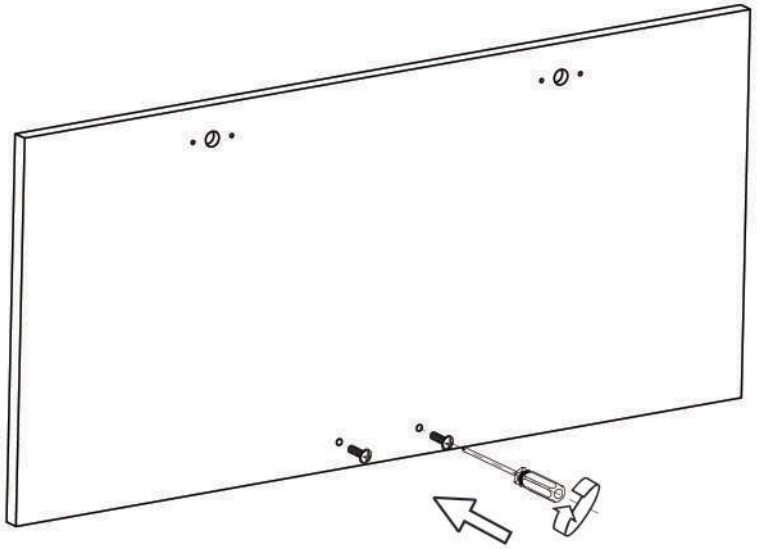

Step 02

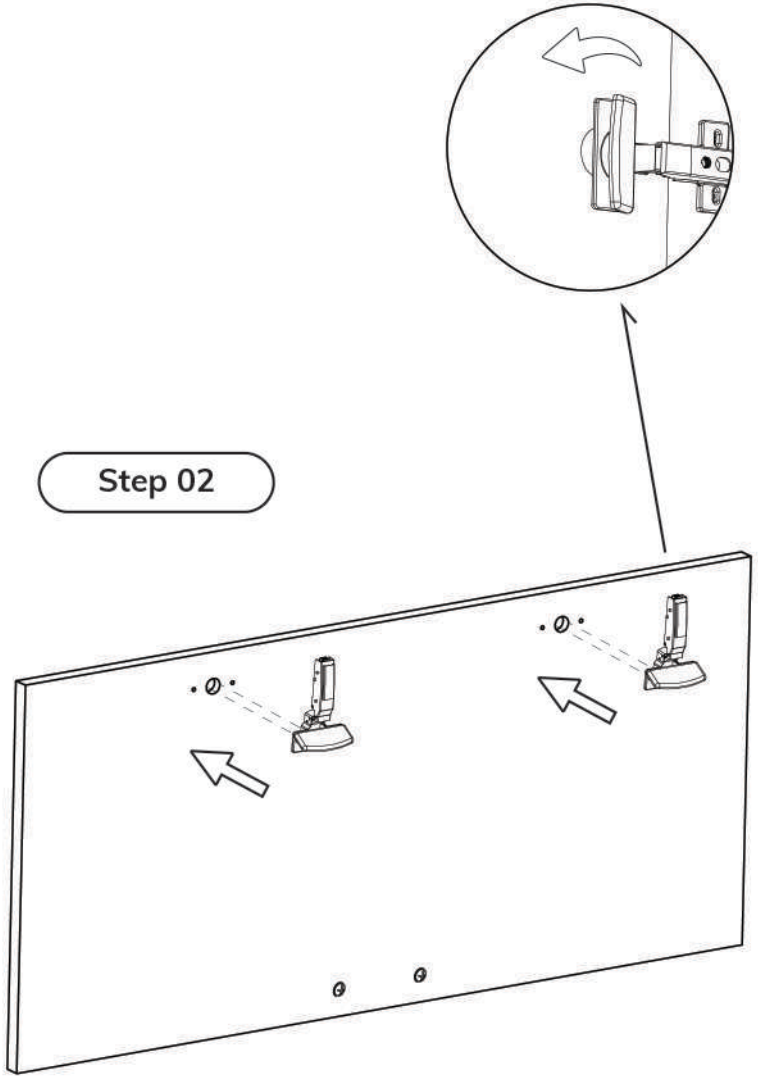

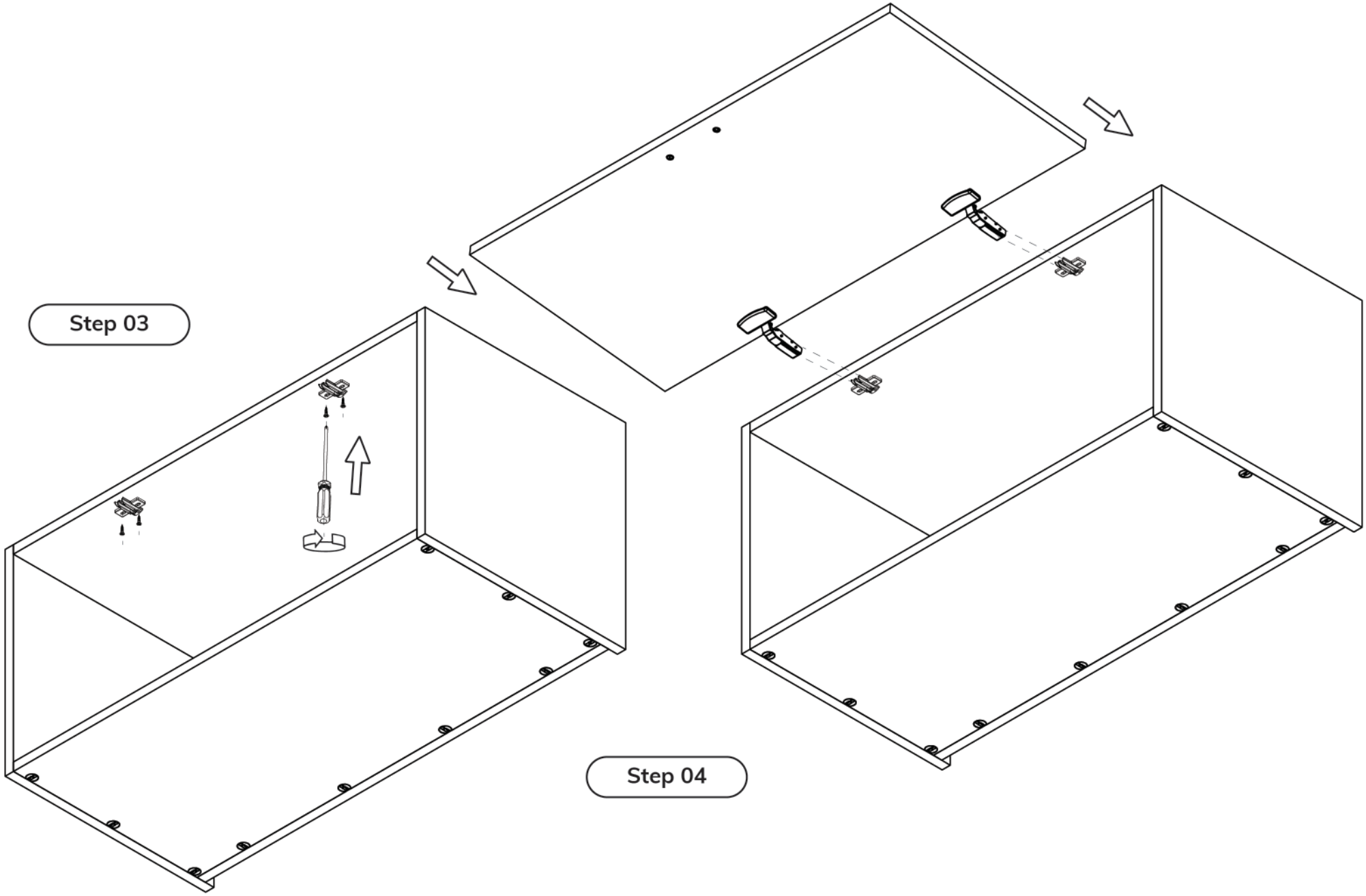
Step 03
Step 04

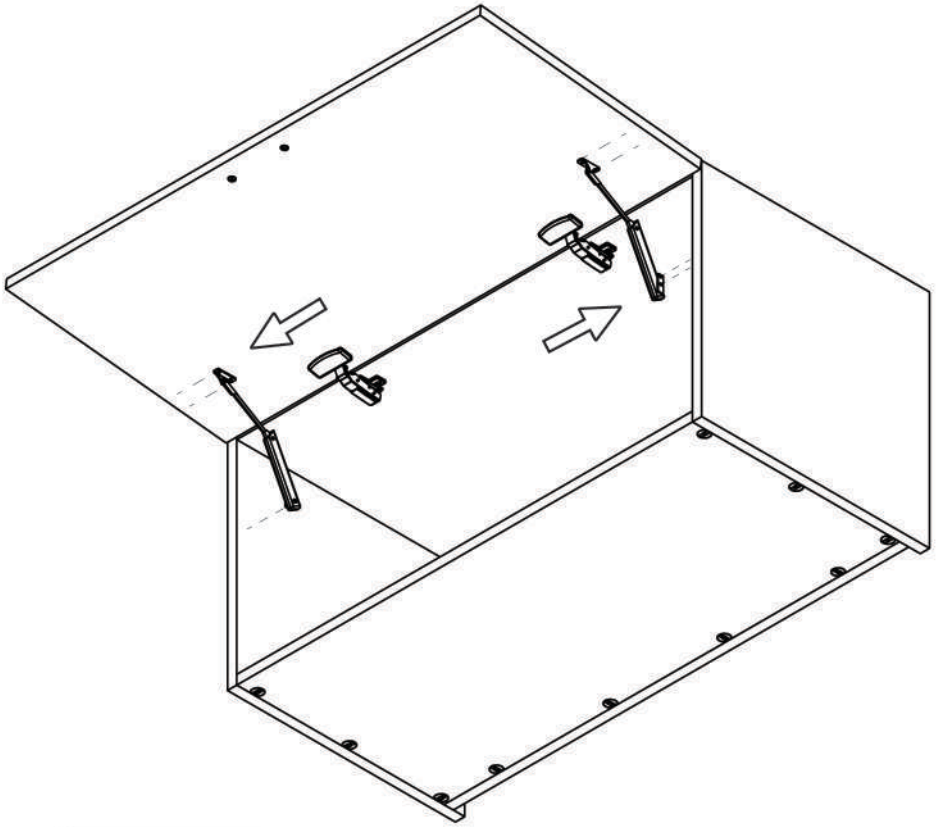

Step 05

Step 06

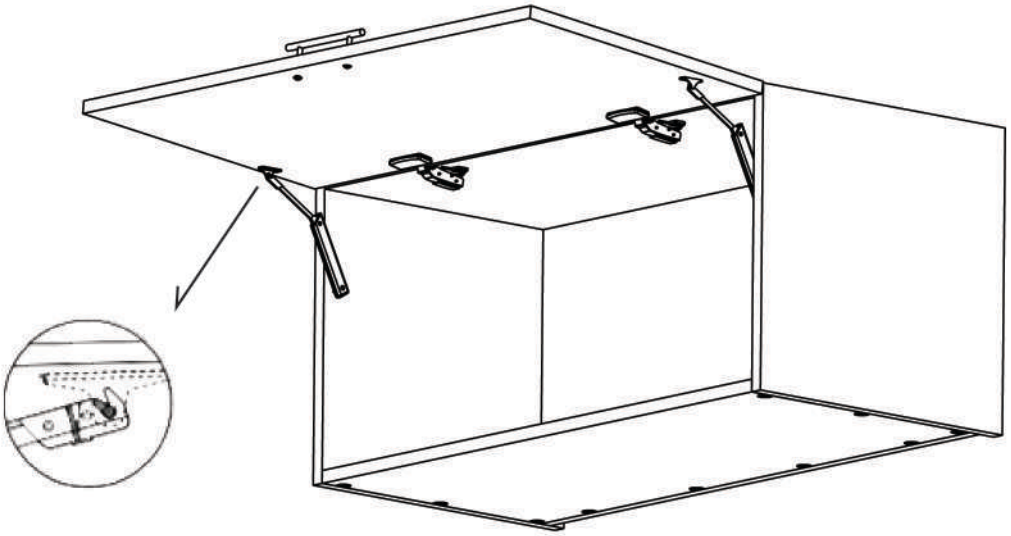

ONLINE Bedrooms

Bridging Unit | Instruction Manual

© 2020 Pb Design Studio.